Available Online at www.ijcsmc.com

International Journal of Computer Science and Mobile Computing

A Monthly Journal of Computer Science and Information Technology

ISSN 2320–088X
IMPACT FACTOR: 7.056

IJCSMC, Vol. 9, Issue. 8, August 2020, pg.56 – 62

iSmart Cyclist Jacket

Harshith H[1]; Dr. M L Anitha[2]
[1]Mtech Student, Department of Computer Science & Engineering, PES College of Engineering, Mandya, India
[2]Professor, Department of Computer Science & Engineering, PES College of Engineering, Mandya, India
E-mail: hharshith02@gmail.com; m_l_anitha@yahoo.co.in

Abstract*— People are using bicycles as means of transport from several years and nowadays, despite there is large availability of new and faster means, use of cycles is not decreasing. Urban development of numerous cities is pointing to friendly environment for cyclists, and considering its environmental benefits, there have been specific policies encouraging the use of bicycles as a means of transport. Since, cycling in a city is not an easy task. Traffic signals, cars, other bicycles, weather conditions, inappropriate roads, obstacles, are some of the things cyclist need to take carefully into consideration to safely complete a ride. The task is sometimes tough when the cyclist knows the way, but if she/he ignores it, navigating can be even more complicated, especially in cities where streets nomenclature does not follow an easily recognizable pattern. And even night time the cyclists will find very difficult to travel because of low intensity of light and the nearby vehicles also find difficult to point them. This paper aims to solve this issue by introducing a Smart Jacket for cyclists so that cyclist will be better visible especially during night through indicating the directions before they take a turn.
***Keywords*— IoT, Jacket, Ardunio, Bluetooth, UV Sensor, Android**

I. INTRODUCTION

This paper aims to provide total safety for bicycle riders. In recent years, cycle riding has become more popular in people. It not only saves energy resources, but also protects the environment from air pollution & noise pollution. For these advantages, people prefer riding bicycles on the road. However, there are also other vehicles, such as buses, cars and motorcycles, and passengers on the road. In this situation, if a cycle does not mount any indication sign to indicate their instantaneous moving actions to surrounding bikes, vehicles and passengers, the cycle rider will take risk of accident. As a result, it is necessary to mount an indication on a cycle to indicate its instantaneous moving actions for reducing the risk of the accident. Unfortunately, a cycle is usually small in size and lightweight so that it is not easy to mount an indication sign, such as a brake sign (stop), a left-turn sign and a right-turn sign, to indicate moving actions. Thus, the abetment cyclist jacket is designed as a solution to reduce the risk of the accident when people ride bicycles on the road.

Major thing that is most concern to the cyclists is safety. Sometimes, it can be serious during night time due to low visibility of light. Studies have shown that cyclists are

chronically bad at estimating how visible they are on the road, especially during night time. An abetment cyclist jacket is introduced in this paper to solve this issue and to make sure that the cyclists are better visible, by indicating the directions through LED'S mounted in the jacket before making any turn. Bicycles are vehicles that do not require a license to operate and share the road with cars, motorcycles, and other fast moving vehicles. An improper lane change from a bicyclist, such as one without any warning, can lead to great injury or death (especially after sundown). Bike safe addresses this safety concern by providing a low-cost device that mimics the warning system motorist's use every day. The system consists of a red brake light and amber turning signal lights that mounts to the rear of the jacket. The bicyclist safely and easily can control the turning lights signal without removing their hands from the handlebars by giving voice input or through pressing the soft buttons provided in the user's android application. The basic theme of this paper is to enable the cyclist to indicate his movements (directions) with the help of an application on one's android smart phone via bluetooth communication. Selecting the soft keys or giving voice commands to the application turns on the respective led arrays attached to the jacket, thereby indicating the directions. The jacket is also designed to monitor "bluetooth controller" application on the android smart phone, the controller is said to send an alert message which includes the current location of the cyclist using GSM and GPS technology, if the cyclist need a help or he/she is in emergency situation can contact to the concerned people through SOS SMS. Whereas other vehicles are built with mirrors to watch the vehicles nearby and passing through by but hence, cycle does not have such availability to know the vehicles passing through that or while he is crossing the road he finds difficulty to take turn. By this condition he/she can face difficulty while in the journey, so to overcome this difficulty we additionally attached the UV sensor to trigger the distance of nearby vehicles and alert the cyclist through some signals which helps them to get rid of accidents[1-5].

II. LITERATURE SURVEY

The review of literature for Smart Wearable Devices based on IoT is discussed below. The development of sensor technology, availability of Internet connected devices to make IoT devices to act smart in emergency situations without human interventions.

In [1] authors demonstrates Smart IoT device for child safety for tracking and helping the parents to locate and monitor their children. If the sensor reads any abnormal values then the parents will receive an SMS to their mobile phone and also an MMS indicating an image captured by serial camera will be sent. And if the pulse rate of the child increases automatically an alert message will be sent to the mobile phone with MMS which consists of an image indicating the surrounding area of the child.

In [2] authors have developed women self-security smart band to provide a security for women where she can protect and take help of others. The system consists of temperature sensor and heart beat sensor. Where the temperature sensor keeps a track of women's body temperature and sends the generated analog data to the controller. The heart beat sensor senses the flow of blood volume that can be decided by the rate of heart pulses and sends the location of the women through GPS and GSM technology to the registered mobile numbers through an SMS. This above system ensures the safety and tracking of women.

In [3] authors have developed women safety application where the user has to install the application and then she has to register to the application. Once done with registration user can login using user id and password. The user will have various options like chatting, sharing of audio, video files and group sharing option is also available. In case if the women fell that she is unsafe or she get into some trouble she can press a panic button in the application so she can get help from anyone, or she can share images as well as live video capturing to family members so they can take required measures through that.

In [4] authors discuss the concept of a Smart Wearable device for little children. It can be used on any cell phone and doesn't require an expensive smart phone. The purpose of this device is to help the parents to locate their child with ease. Wi-Fi and Bluetooth appear to be an unreliable medium of communication between child and parent. Therefore, the main focus is towards is an SMS text sending through communication medium between child's wearable and the parent as the environment for GSM mobile communication. The parent can see the current status of their child by simply sending specific keywords such as "LOCATION", "TEMPERATURE", "SOS", and "BUZZ" to the wearable device. The device will reply back with a text containing the real time, accurate location, temperature of the child using various sensors.

In [5] authors highlight the need for smart intelligent security system for women that can automatically sense and rescue the victim. The device thus introduced is the integration of multiple devices. The hardware continuously communicates with a smart phone with internet access in it. The application has access to GPS and messaging services which is programmed in such a way that she can share a message to friends or relatives when she is in danger situation. Whenever it receives an emergency signal, it can send a help request along with the location coordinates to the police station, relatives and the people in near radius who have that application. Also when the women feel danger her pulse rate goes high it can be detected by the pulse rate sensor and in that she can send message.

In [6] authors present a system in which when a women sense danger they need to press only a single button on the device. In such case GPS tracks the location of the women and sends emergency message using GSM to saved contacts and also a police control room. Also, the audio and video recorder will start to capture the live incident to report to the person who received an emergency message from her. Also the pressure sensor is equipped in this system that senses the physical pressure. If the value of the sensor varies the message will be sent to the contacts. A buzzer is also attached in the system wherein case if the device gets activated the buzzer also produces high beep sound at the same time to alert the people nearby so she can get help at earlier as possible. This module can be carried in handbags, purse etc.

In [7] proposed design will help the girl when she is in danger zone. She can make rescue of herself in danger situations. In this paper authors have mainly focused on the women safety and proposed an Electronic based Jacket that can help to protect women and operate through smart phone. The system operates on the basis of 3 buttons attached to the jacket. First button is used for circuit switch on/off. Second button enables the GPS, GSM, and Buzzer. Third button is used for shock circuit. It automatically sends the location to predefined numbers. That can save three numbers such that the three numbers can be police station, neighbors, and parents or friends. When she press the button that time buzzer will be on. Shock circuit will also be turn on at that situation so she can injure the attacker for self-defense purpose so she can protect by herself or she can take help from others through messaging services. At the same time camera will be on for capturing image and to be saved in memory card. Hence, it will be helpful for police in searching attacker.

III. PROPOSED METHOD

The aim of this paper is to enable the cyclist to indicate any instantaneous movement with the help of an application on one's android smart phone via bluetooth communication. Selecting the soft keys or giving voice commands to the application turns ON the respective LED arrays for indicating the directions attached to the jacket, there by indicating the directions. In case of any problems faced at unknown remote areas if the person requires help if he gets injured at that time he can send his location to concerned one's to handle the situations. The cyclist can send emergency message if he requires any help from concerned people.

With the help of Ultrasonic sensor we can get to know the distance of nearby vehicles so that the cyclist will get to know that some vehicle from the backside is overtaking him by that he will be getting alert signal through voice especially while crossing or turning conditions. By giving a voice output the rider can come to know that nearby vehicles and ride accordingly. So that he can miss the chances of accident.

OBJECTIVES

- To build a cyclist jacket that can make sure that the cyclists are better visible especially during night time.
- Providing SOS SMS for GPS location during panic situations.
- Interfacing to smart phone with smart jacket using Bluetooth**.**
- Detect the nearby vehicles and alerts through voice output (UV Sensor).

Hardware Requirements

- Arduino Nano microcontroller.
- LED lights (with reflectors).
- HC-05 Bluetooth Module.
- UV Sensor.

Software Requirements

- Arduino IDE.
- MIT App Inventor.

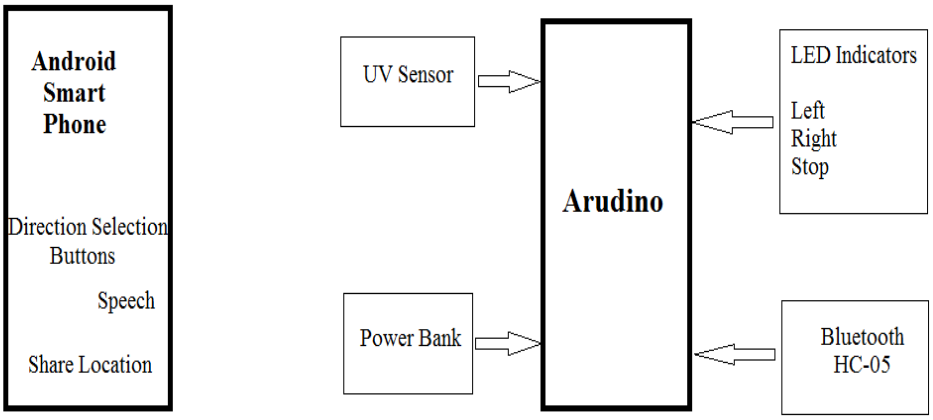

Figure 1: Block diagram of Smart Cyclist Jacket

A LED (Light Emitting Diode) is a semiconductor light source, is used as indication lights in the jacket and usually increases the attraction and look of the cyclist jacket during night time. However, LED's have few many advantages as it consumes low energy consumption, longer life time, smaller in size, cool light and fast switching.

The system uses the ATmega328p microprocessor from the Arduino Nano development board because of its compact and its simplistic nature. The Arduino Nano is a small, complete, and breadboard-friendly board based on the ATmega328 (Arduino Nano 3.0). It has more or less the same functionality of the Arduino Duemilanove, but in a different package. It lacks only a DC power jack, and works with a Mini-B USB cable instead of a

standard one. The main process of this project is carried over the microcontroller where the bluetooth module is connected and communicates via android mobile bluetooth.

Bluetooth is a standard wireless technology used for exchanging data between fixed system and mobile devices over short distances using shorter wavelength, with radio bands from 2.400 to 2.5 GHz. The bluetooth module using in this project is Bluetooth with version HC-05 it is easy to use bluetooth Serial Port Protocol (SPP) module, designed for transparent wireless serial connection setup. The HC-05 module can be used in a Master or Slave configuration, making it as a greater solution for wireless communication. In our project the bluetooth communicates through the android application and the Arduino board placed in the jacket.

UV Distance Sensor determines the distance travelled through an object by measuring the time taken by the sound that is reflected from the object. UV sensor consists of two membranes, one membrane produces sound, and another membrane catches the reflected echo sound. Hence UV Sensor is placed in the jacket in backside to measure the distance nearer to the cyclist and if the vehicle is nearer to the cyclist it detects the distance and alerts the cyclist by producing the voice output through his android mobile.

Arduino IDE is open source software that is mainly used for writing and compiling the code into the Arduino Module. It is official Arduino software, making code compilation too easy that even a common person with no prior technical knowledge can get their feet wet with the learning process. It is easily available for operating systems like MAC, Windows, and Linux runs on the Java Platform that comes with inbuilt functions and commands that play a vital role for debugging, editing and compiling the code in the environment.

MIT App Inventor lets you develop applications for Android phones using a web browser and either a connected phone or emulator. The App Inventor servers store your work and help you keep track of your projects. It allows computer programming to create application software for two operating systems: Android and for iOS. It uses Graphical User Interface (GUI) similar to the programming languages, and it is simple also no complexity for creating new applications mainly for beginners. For this project we prefer this platform to develop an Android Application for the cyclist to operate the Jacket via Bluetooth.

STEPS:

1) Start
2) Initialize Arduino, Bluetooth, Android Application
3) If Left (say left)
   Left turn light indication turned ON
4) If Right (say right)
   Right turn light indication turned ON
5) If Stop (say stop)
   Turn On red light indicating Stop
6) In Case of Emergency Tap Share Location.

IV. RESULTS

The experimental setup of the proposed system is as shown in the figure 2. The system comprises of Arduino Nano, Bluetooth HC-05 module, UV Sensor and bending wires for connection.

Figure 2: Connection setup of the Model

Figure 3: Smart Cyclist Jacket

The figure 3 demonstrates the Smart Cyclist Jacket, it comprises of 3 LED indicators for left, right and stop and the other one is the UV sensor to measure the distance of behind vehicles.

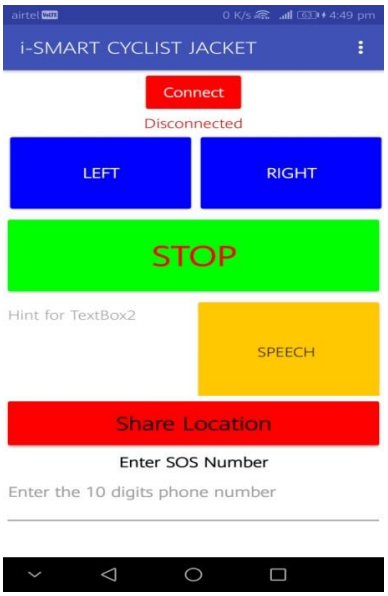

Figure 4: Android Application

The figure 4 shows the android application of smart jacket for the cyclist. Firstly, he should turn on his bluetooth in his mobile and pair HC-05 bluetooth device with password. After it gets connected he can push the buttons left, right or stop provided in the application and also he can give inputs through voice commands by clicking the speech button in the application. The user also get the output voice command when he is ready to turn right or left by clicking soft button or by voice input through speech engine at the same time UV sensor sense the distance of nearby or behind vehicles for the bicycle if it is nearer to the cyclist by around 50cm it produces an voice output through the application so he can get to know the behind vehicles are nearest to him by that he can take measures while before turning the bicycle.

V. CONCLUSION

This paper concludes that using bicycles in our daily life and by improvement in the technology for the bicycle users; we can reduce many problems faced by bicycles riders today. By implementing Smart Jacket for bicycle users can reduce the risk of traffic accident throughout the nation especially in major cities, Bangalore, Mumbai, Hyderabad etc. Today Pune is the best example for promoting their travelling from motor vehicles to bicycles. The main reason today the cyclists facing is riding their bicycles during night time due to low visibility of light, by wearing the smart jacket the cyclists are better visible to other motorists there will be more advantages by wearing the cyclist jacket. So by implementing the Smart Cyclist Jacket people may turn their interest towards bicycles because it looks attractive they feel it as an innovative one for the market and for safety precautions they will prefer the Cyclist Jacket to wear while they travel in cycle. As one year back the Motor as per Motor Vehicle Act 2019 they passed the new rule for compulsory of wearing helmets for motor bike users and wearing belts for car users, or else they have come through some penalty for paying money to traffic police. Likewise, as for cycle users there are no rules applied to them they can ride freely as it is referred as echo friendly vehicle, by this implementation of jacket and market of Smart Cyclist Jacket can come to exist, for cyclists they can make the compulsory rules to wear Jacket for their safety purpose.

REFERENCES

[1]. M Nandini Priyanka, S Murugan, K N H Srinivas “Smart IoT Device for Child Safety & Tracking” International Journal of Innovative Technology & Exploring Engineering ISSN: 2278-3075, Volume-8, Issue-8 June 2019.

[2]. Asst Prof. Shewela Suryanwanshi, Arti Shekhane, Archana Sutar, Pranjali Gaidhani “Women Safety Band Using IoT” International Journal for Research in Applied Science and Engineering Technology ISSN: 2321-9653 IC Value:45.98, Volume 6, Issue X, Oct 2018.

[3]. Chetal Indurwade, Homwati Pawar, Nikita Naidu, Raksha Sadavarte, Prof.Abhijith Pande “Helping Hands: An Android Based Women Security System”.

[4]. Gopinadh Jonnadula, Bhanu Prasad Dawu, Hari Kishore Kandula, Vinod Donepudi “Child Safety Wearable Device” International Journal for Research in Applied Science and Engineering Technology Volume 6, Issue II Feb 2018.

[5]. Roshni S. Sune, M. H. Nerkar. "IOT Based Women Tracking and Security with Auto Defender System" (2018).

[6]. A.H.Ansari, Balsaraf Pratiksha P., Maghade Tejal R., Yelmame Snehal M. "Women Security System using GSM & GPS" (2017).

[7]. Swapnali N. Gadhave, Saloni D. Kale, Sonali N. Shinde. “Electronic Jacket for Women Safety”, IRJET Volume 4 Issue 5, May 2017

[8]. Harshith H, M L Anitha , “Survey on Safety Devices Using IoT” International Journal for Research in Engineering Application and Management(IJREAM) ISSN:2454-2150, Vol-06, Issue-01, April 2020.

